Dry Disconnects

Dry Disconnect Bayonet Style Couplers

2" 90° Straight Swivel Couplers

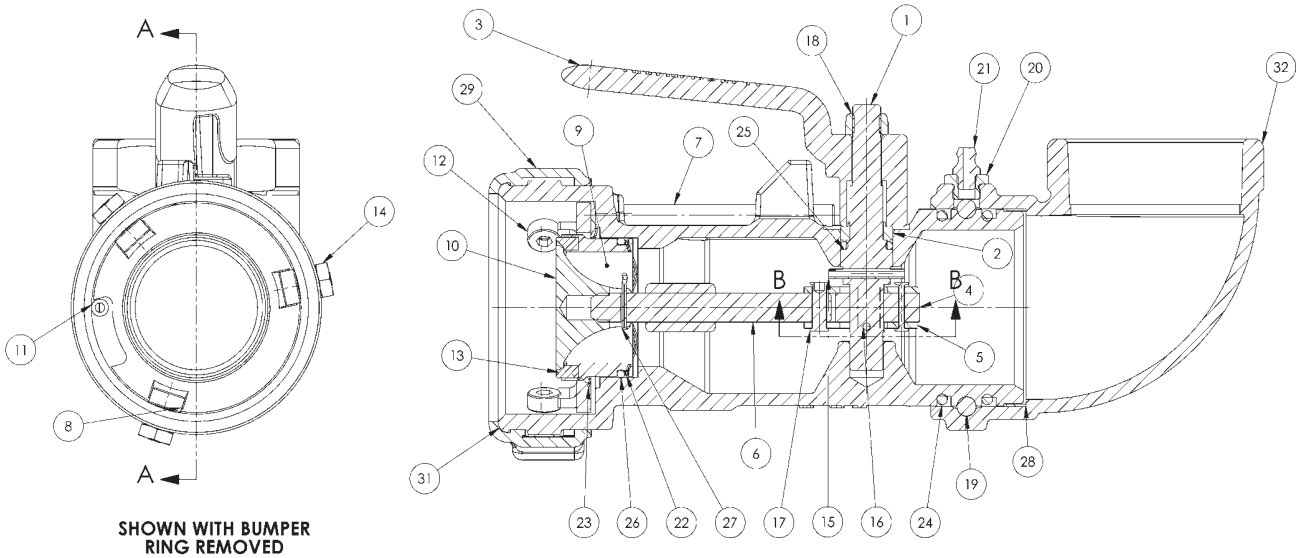

The 90° swivel coupler (BS series) is illustrated. The straight swivel coupler (BSS series) uses the same components, except it does not have #21A grease nipple, it utilizes a #21B set screw plug.

Bill of Materials BS6x-200 and BSS6x-200

Item #	Description	Part #	Qty
1	lever shaft	**40138SS**	1
2	follower	**40139SS**	1
3	lever (handle)	**40140SS**	1
4	link	**40141SS**	1
5	belt link	**40142SS**	2
6	stem	**40143SS**	1
7	interlocking pin	**40144SS**	1
8	lock rink	**40145SS**	1
9	nose piece	**40146HC**	1
10	poppet	**40147CA**	1
11	coiled pin	**40148SS**	1
12	bayonet stud	**40149SS**	3
13A	Buna nose seal (BS61-200)	**40150BN**	1
13B	Viton® nose seal (BS62-200)	**40150VI**	1
14	jam nut	**40151SS**	3
15	spring pin	**40152SS**	1
16	grooved pin	**40153SS**	1
17	rivet	**40154SS**	2
18	lock nut	**40155SS**	1

Bill of Materials, *continued*

Item #	Description	Part #	Qty
19	ball bearing	**40156SS**	32
20	ball plug	**40157BR**	1
21A	grease fitting (BS6x-200)	**40158ST**	1
21B	set screw (BSS6x-200)	**40178SS**	1
22	wave spring	**40159SS**	2
23	wave spring washer	**40160SS**	1
24A	Buna swivel O-ring (BS & BSS61-200)	**40161BN**	2
24B	Viton® swivel O-ring (BS & BSS62-200)	**40161VI**	2
25A	Buna stem O-ring (BS & BSS61-200)	**40162BN**	1
25B	Viton® stem O-ring (BS & BSS62-200)	**40162VI**	1
26A	Buna nose O-ring (BS & BSS61-200)	**40163BN**	1
26B	Viton® nose O-ring (BS & BSS62-200)	**40163VI**	1
27	cotter pin	**40164SS**	1
28	bearing strip	**40165NY**	1
29	bumper ring	**40166VY**	1
30	label	**40161AL**	1
31	main body	**---**	1
32	swivel body	**---**	1

Repair Kits

Part #	Description	Includes Item #
BS61-200RK1	Seal repair kit, Buna nose seal, spring pin, grooved pin, Buna swivel O-rings, Buna stem O-ring, Buna nose body O-ring, cotter pin, bearing strip & bumper ring	13A, 15, 16, 24A, 25A, 26A, 27, 28, 29
BS61-200RK2	Seal repair kit, Viton® nose seal, spring pin, grooved pin, Viton® swivel O-rings, Viton® stem O-ring, Viton® nose body O-ring, cotter pin, bearing strip & bumper ring	13B, 15, 16, 24B, 25B, 26B, 27, 28, 29
BS61-200RK2	Swivel seal repair kit, Buna swivel O-rings & bearing strip	24A, 28
BS62-200RK2	Swivel seal repair kit, Viton® swivel O-rings & bearing strip	24B, 28

Product instruction sheets and technical data, can be viewed on our website www.dixonbayco.com, and select the "Resources" Menu